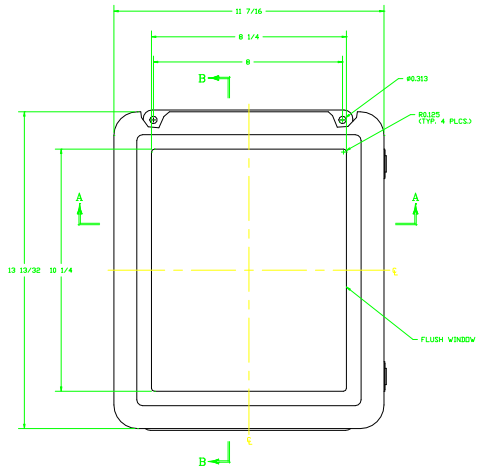

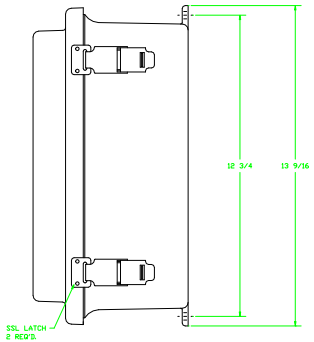

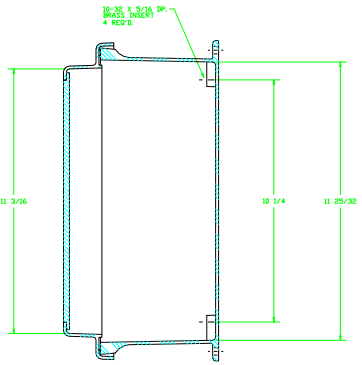

SECTION B–B

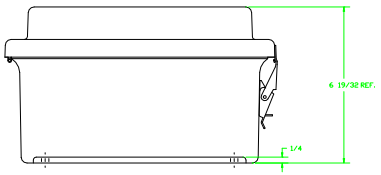

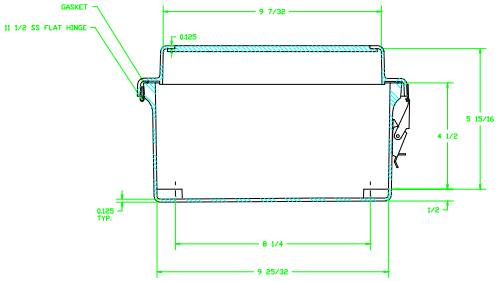

SECTION A–A

NOTES:

NEMA 4X		TOLERANCES UNLESS SPECIFIED	DECIMAL ± .010 / FRACTIONAL ± 1/32
COLOR GLACIER GRAY RR1013			
MATERIAL: F.R. POLYESTER FIBERGLASS	DR. BY: SH	DATE: 8/15/96	HUBBELL WIEGMANN
LET. / REVISION RECORD / DATE / BY / CHG.	CHK. BY	DATE	
	APB. BY	DATE	CUSTOMER / AutoCAD DWG FILE: HW-RHJ121006CHQRV
	SCALE: DO NOT SCALE	PART NAME: ENCLOSURE	PART NO.: HW-RHJ121006CHQRV